Figure 1

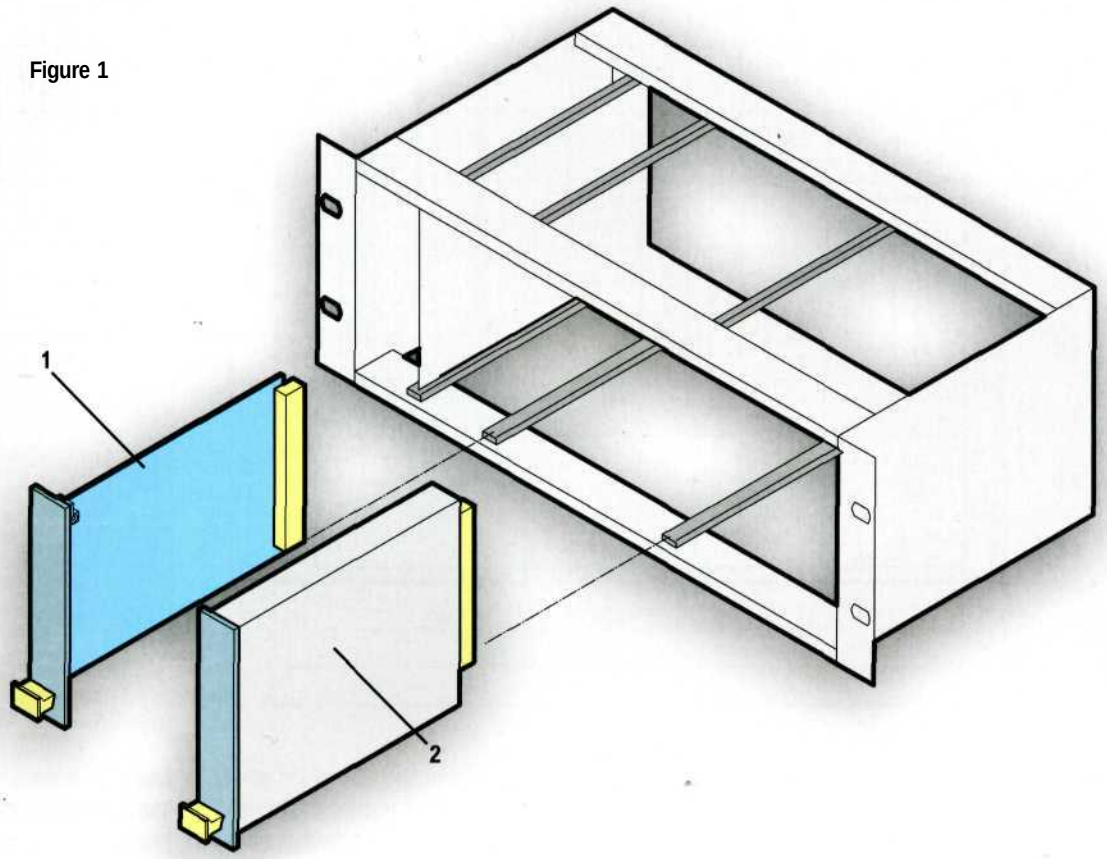

1 Board type plug-in unit
2 Box type plug-in unit

19" system dimensions and definitions
The width over the mounting flanges is 482,6 mm (19"), which created the term **19" system.**

Width:
The overall width behind the mounting flanges (incl. screws) shall be max. 449 mm. The subrack aperture width is subdivided by a modular pitch of 1 **HP** = 5,08 mm (2/10").

Height:
The subrack total height is defined by a multiple of a unit of 1 U = 44,45 mm (1 3/4").

Depth:
The subrack total depth is not explicitly specified by the standard. The individual dimensions depend on the board depth, rear connector tails or rear input/output plug-in units.

A **slot** is a multiple of horizontal pitches and may be different in specific applications.

A **board type plug-in** unit consists of a printed board fitted with a front panel and a connector. The subrack aperture dimensions on the front are mirrored to the rear in case of rear mounted plug-in units.

A **box type plug-in** unit is typically housing bulky components or multiples of boards.

1.02 Basic subrack dimensions

Figure 2

Subrack front view for 3 U, 6 U and 9 U

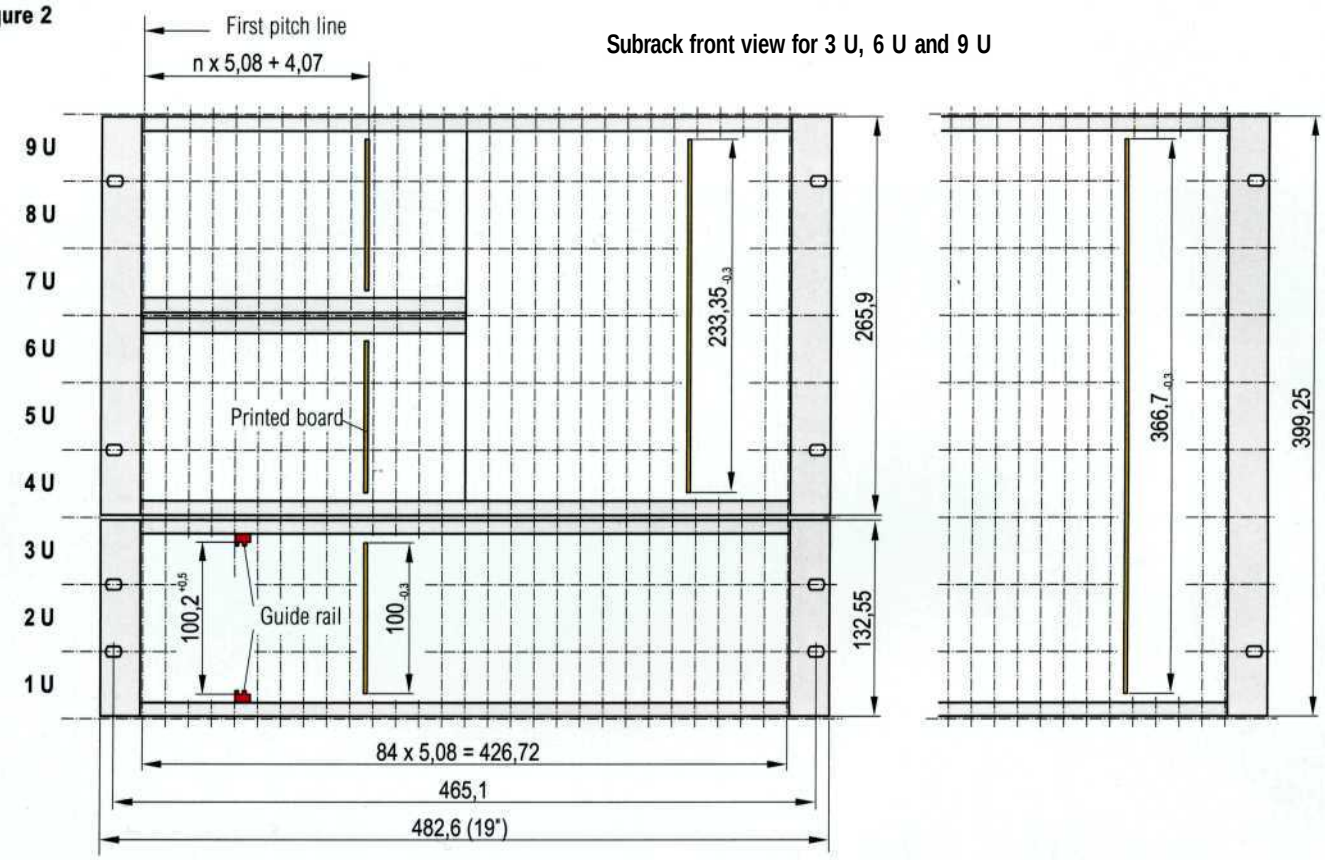

Height:
1 U = 44,45 mm. Nominal: (44,45 - 0,8) ± 0,4
3 U = (3 x 44,45 - 0,8) ± 0,4 = 132,55 ± 0,4

Width:
482,6 mm ± 0,4.
Mounting grid for front panels: 5,08 mm.
Subrack aperture: > 84 x 5,08 mm

Note:
The height dimension $100{,}2^{+05}$ is derived from the printed board height dimension and a min. tolerance of 0,2 mm. The max. tolerance of 0,2 + 0,5 = 0,7 mm includes the clearance tolerance of the subrack horizontal members.

Figure 4

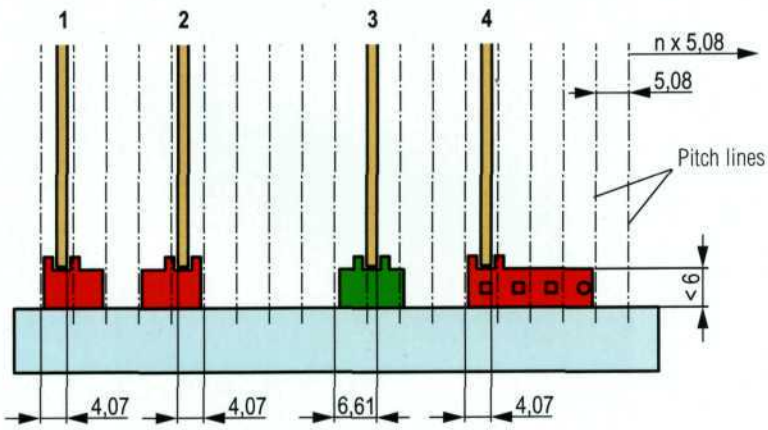

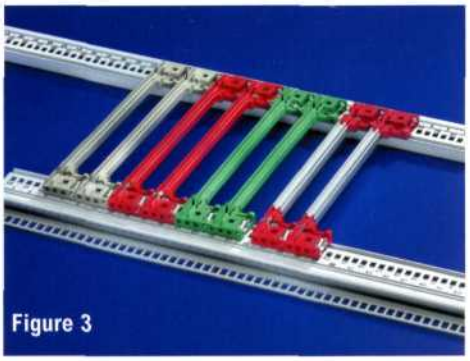

Figure 3

Printed board thickness is in general 1,6 mm. Thicker boards are possible but need to be agreed between contracting parties. If two part connectors are used the increased thickness shall be opposite to the reference plane of the board (Ref. plane = ref. to first pitch line).

1 Guide rail for plug-in units as per IEC 60297-3-101.
2 Mirrored to version 1. Used for rear I/O or on right hand position.
3 Guide rail with off-set position (board shifted by 2,54 mm).
4 Guide rail with keying and alignment pin receptacle as per IEC 60297-3-103 (see also 1.11).

1.04 Printed boards

Figure 5

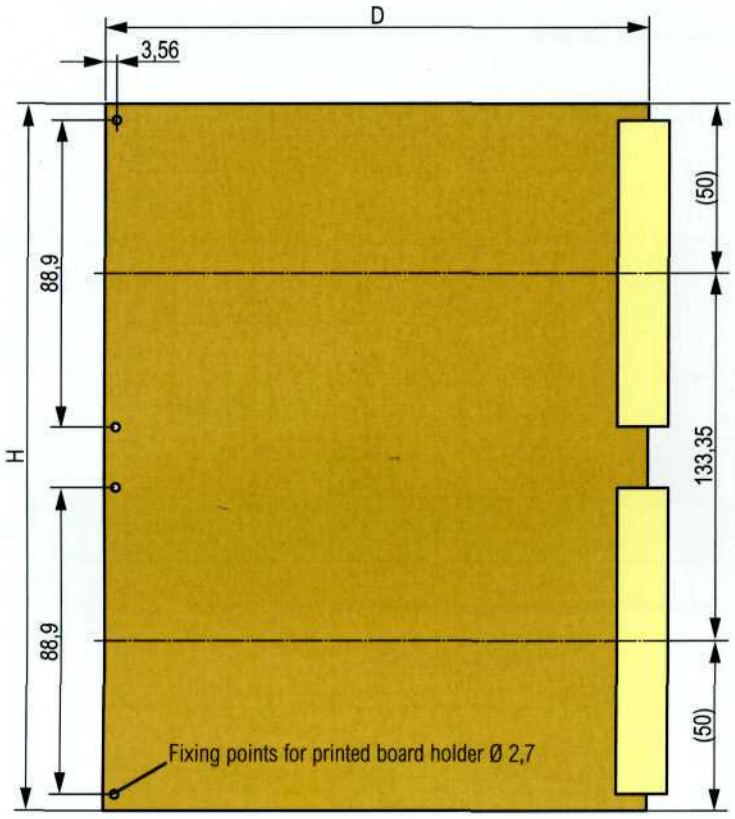

The printed board dimensions are specified in IEC 60297-3-101. The figure below shows a typical 6 U board.

Dimensions:
The printed board dimensions are defined as the base of the "Eurocard" form factor
(H = 100xD = 160mm).

Height:
The height increments are in accordance to the units of the subrack (1 U = 44,45 mm). The table shows the most popular board formats.

Thickness:
The thickness of a board is, if nothing specifically required, 1,6 mm. Thicker boards should be agreed between user and vendor with respect to the accessories concerned, e. g. guide rails.
IEC 60297-3-101 as the relevant standard for 19" based subracks deals with two part connectors of the series IEC 60603-2, IEC 61076-4-113 and IEC 61076-4-101. Other connectors may influence the board or subrack depth dimensions.

Table 1

Printed board	
Heigth H +0/-0.3	Depth D +0/-0.3
3 U = 100 6 U = 233,35 9 U = 366,7	80 100 160 220 280

Figure 6

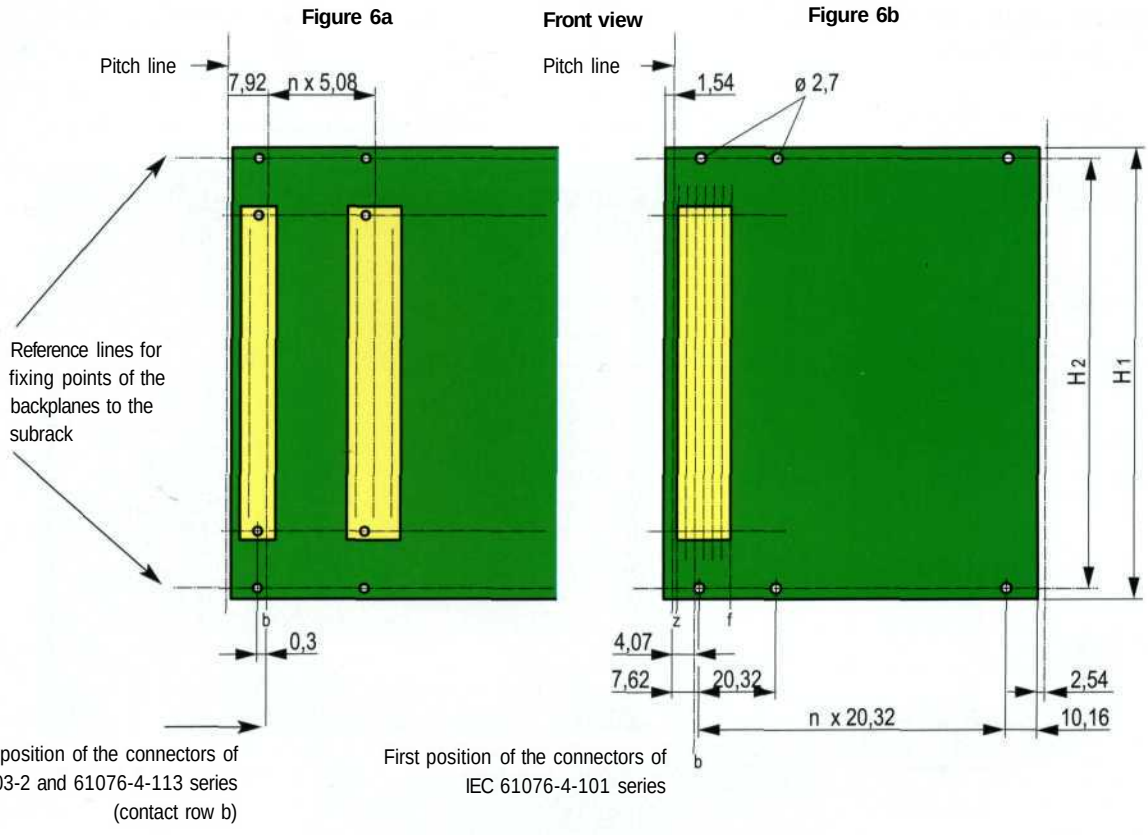

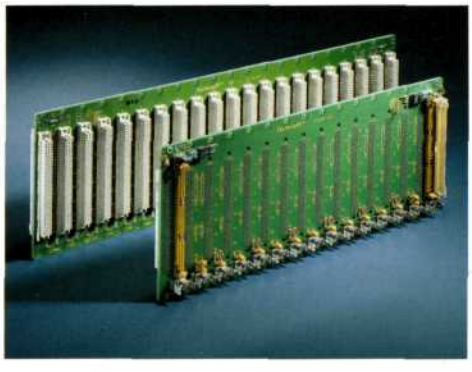

The connectors of the above described IEC series fit on the backplane within the same slot width but with different reference dimensions of the contact grids to the pitch line. The contact grid in figure 6a is 2,54 mm and 2 mm in figure 6b.

Typical applications for the IEC 60603-2 and IEC 61076-4-113 series are VME 64 and 64X. IEC 61076-4-101 series connectors are used for Compact PCI.

The formula for H1: n x U -4,8.
Example for 3 U = 3 x 44,45 - 4,8 = 128,55.

The formula for H2: n x U -10,85 =
3x44,45-10,85 = 122,5.

1.06 Subrack depth mounting dimensions

Inspection dimensions for the subrack front depth D from the front attachment plane to the backplane attachment

The formular for connectors type IEC 60603-2 and 61067-4-113 (application example VME) is the same as for connectors type IEC 61076-4-101 (application example CPCI):

D = printed board depth + 15,6
(e.g. 160 + 15,6=175,6).

Figure 7

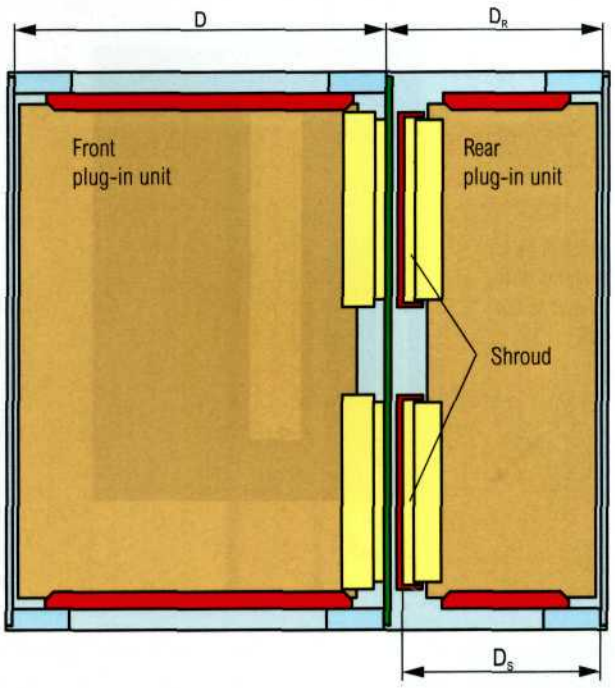

Inspection dimensions for the subrack rear depth D_R from the rear attachment plane to the backplane attachment

Application example VME
The formula for connectors type IEC 60603-2 and 61067-4-113 is:

D_R = printed board depth + 22,48
(e.g. 80+ 22,48 = 102,48).

Application example CPCI
The formula for connectors type IEC 61067-4-101 is:

D_R = printed board depth + 20
(e.g. 80+ 20 = 100).

Explanations for the rear arrangement of plug-in units

For I/O interface the rear plug-in units are fitted with the inverted versions of the cited connector types. This allows the plug-in function to be directly on the tails of the front connectors protruding from the backplane. The shroud is used as a mechanical support to align the rear plug-in function and to protect the tails from damage.

Inspection dimensions for the shroud D_S from the rear front panel attachment to the bottom of the shroud

Application example VME
The formula for connectors on the rear plug-in unit type IEC 60603-2 (inverted version) is:

D_S = printed board depth+ 10,28
(e.g. 80+ 10,28 = 90,28).

Application example VME 64 extension
The formula for connectors type IEC 61076-4-113 is:

D_S = printed board depth+ 12,78.

Application example CPCI
The formula for connectors type IEC 61067-4-101 is:

D_S = printed board depth + 12,14.

The max. thickness of the backplane should not exceed 6 mm.

Figure 8

Side view section; front attachment area

Side view section; mounting dimensions and pitch lines

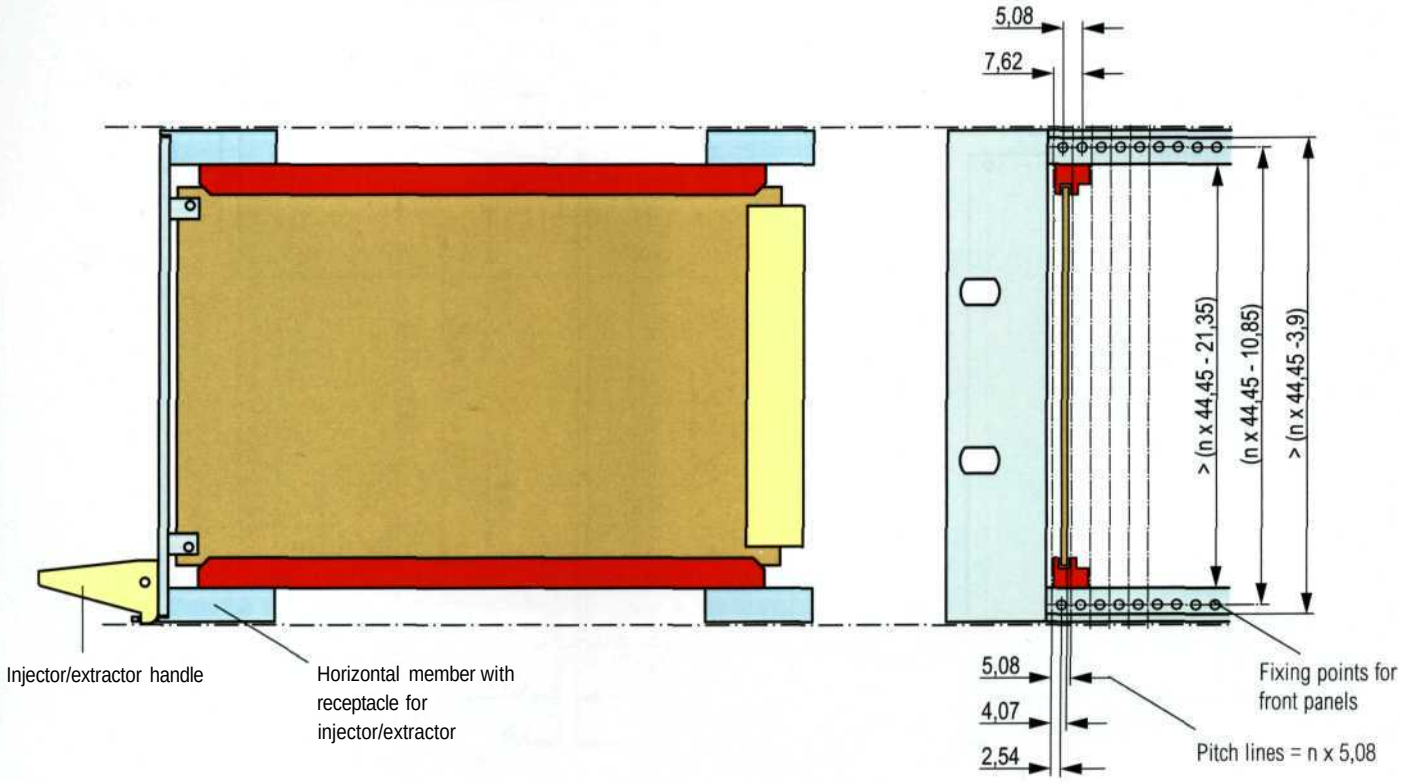

Subrack front design alternatives

For the subrack front design two options are applicable: Horizontal members with or without injector/extractor receptacle.

For details see
IEC 60297-3-101 and IEC 60297-3-102.

1.08 Dimensions of subrack associated plug-in units

Figure 9

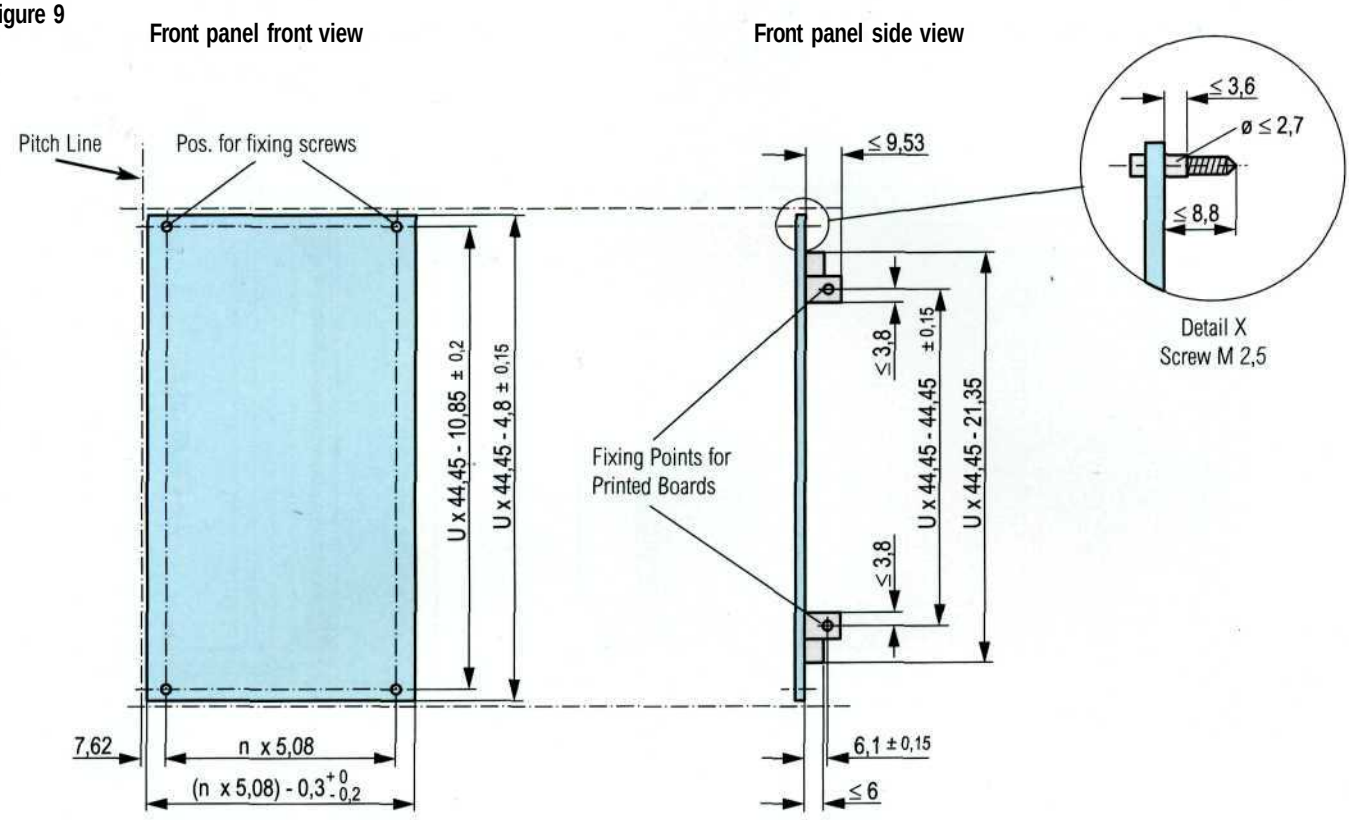

Plug-in units
Subrack related plug-in units are the sub-assemblies of a subrack. There are principally two versions: The printed board type and the box type plug-in units.

The printed board type plug-in unit consists of a printed board as the carrier of the circuitry and the electronic components including the connector and a front panel.

The box type plug-in unit usually consists of a metal housing in which one or more printed boards may be located. The front panel and the connector positioning follows the same dimensional rules as those applying to the printed board type plug-in units.

The drawings above illustrate the dimensional rules of the front panels within the pitch lines of a subrack and the reference fixing points for printed boards at the rear of a front panel. Detail X is the only standardized fixture but may be replaced by individual fasteners if agreed between vendor and user.

Figure 10

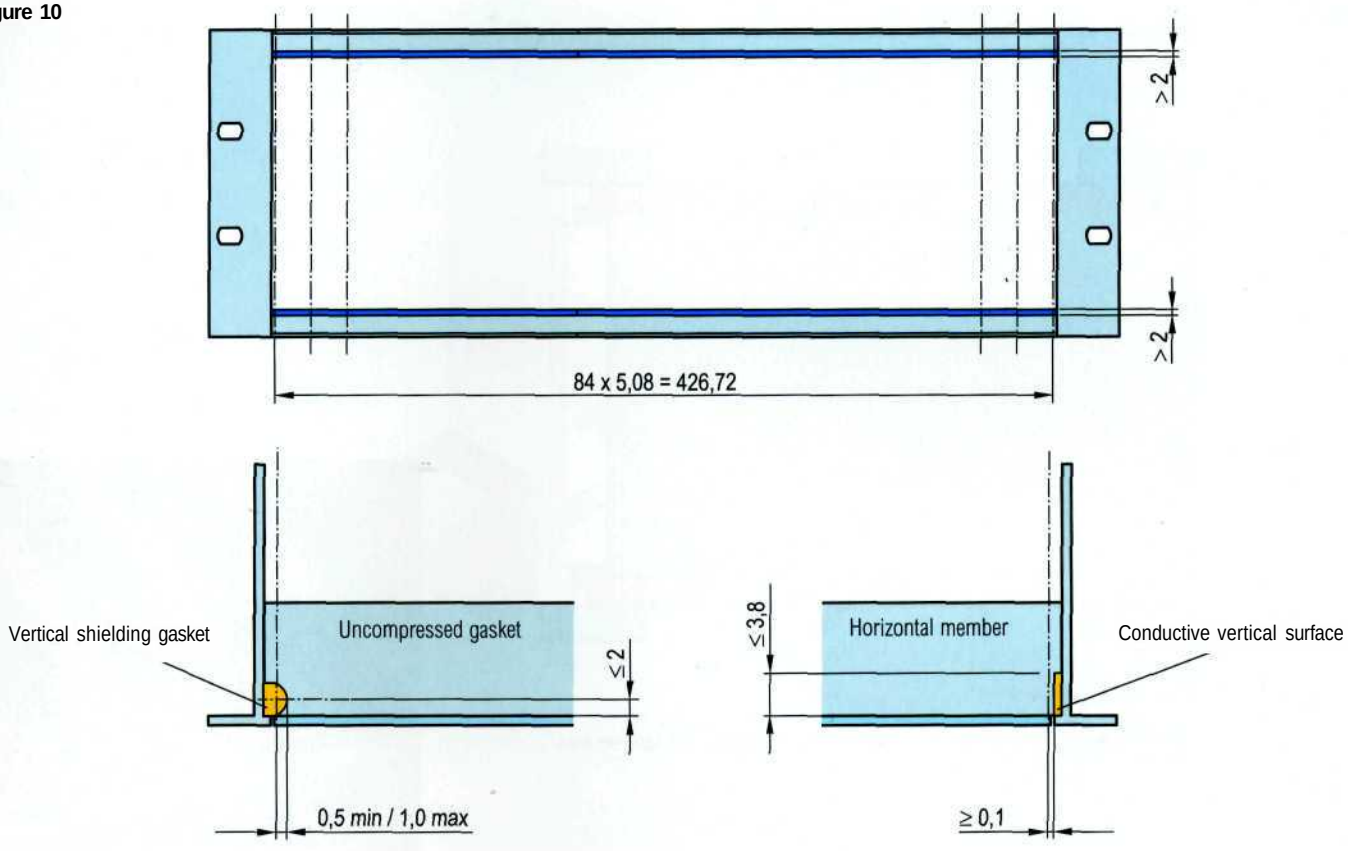

Figure 11

Front panel top view cross section

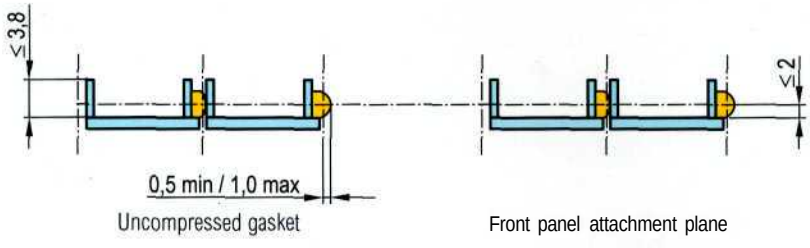

Subrack/front panel shielding

Shielding measures against high frequency interference are defined by standardized dimensions on the front area only. Other areas of a subrack are not critical regarding the compatibility of plug-in units and are therefore left to individual measures. If rear plug-in units are used the dimensions of the front area should be mirrored.

Missing dimensions see IEC 60297-3-101.

1.10 Subrack/plug-in unit electrostatic discharge provisions (ESD)

Figure 12

Side view cross section: front attachment area

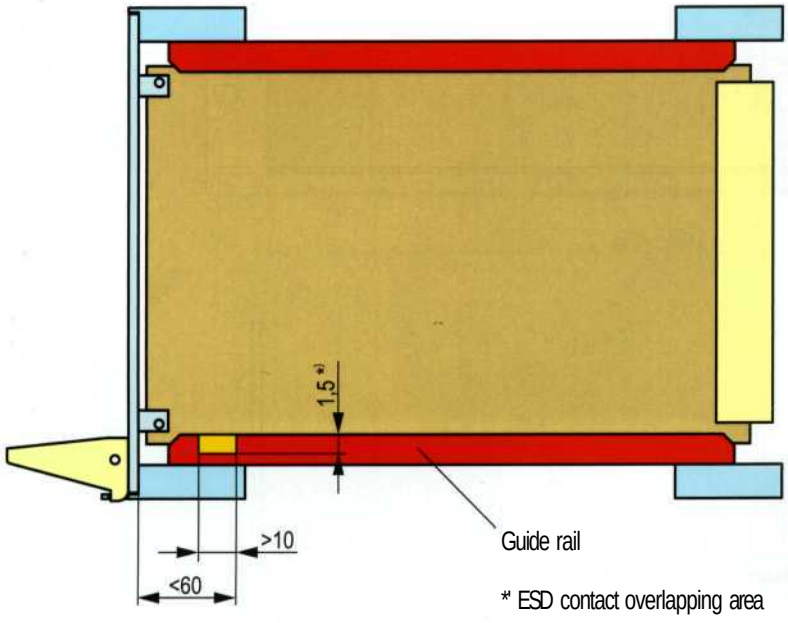

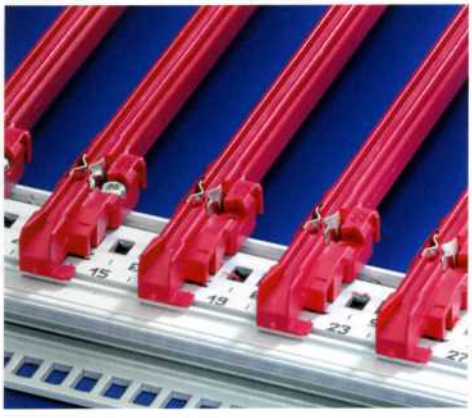

Electrostatic discharge

IEC 60297-3-101 describes an optional method of electrostatic discharge. It is a contact clip which can be placed into the guide rails, close to the front of the subrack. Usually the guide rails are made of insulating material and if prepared accordingly by the vendor, the same guide rails will mostly accept the ESD clip even when retrofitted.

For the proper function the clip has to connect to grounded parts of the subrack and to conductive sections on the printed board. In order to avoid discharge sparks a discharge resistor should be used on the printed board.

Figure 13

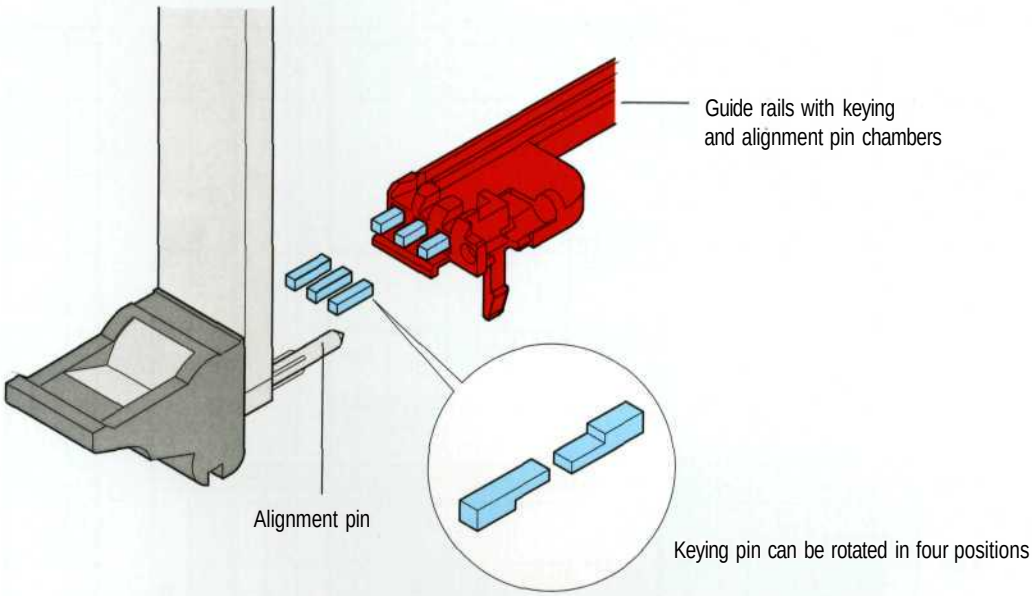

Keying and alignment pin

IEC 60297-3-103 describes an arrangement of keying and alignment between the plug-in unit front panel and the subrack. This method of keying was chosen for the standard instead of connector related solutions for the benefit of maximum design freedom on the backplane. The alignment pin is designed for the correct positioning of EMC shielded front panels and in specific applications as a discharge pin between the front panel and the subrack. For both solutions, keying and alignment, caution is needed when chosing the subrack and the front panels since retrofitting might become very costly.